Emulsion mixing device Jetmix

Operating manual

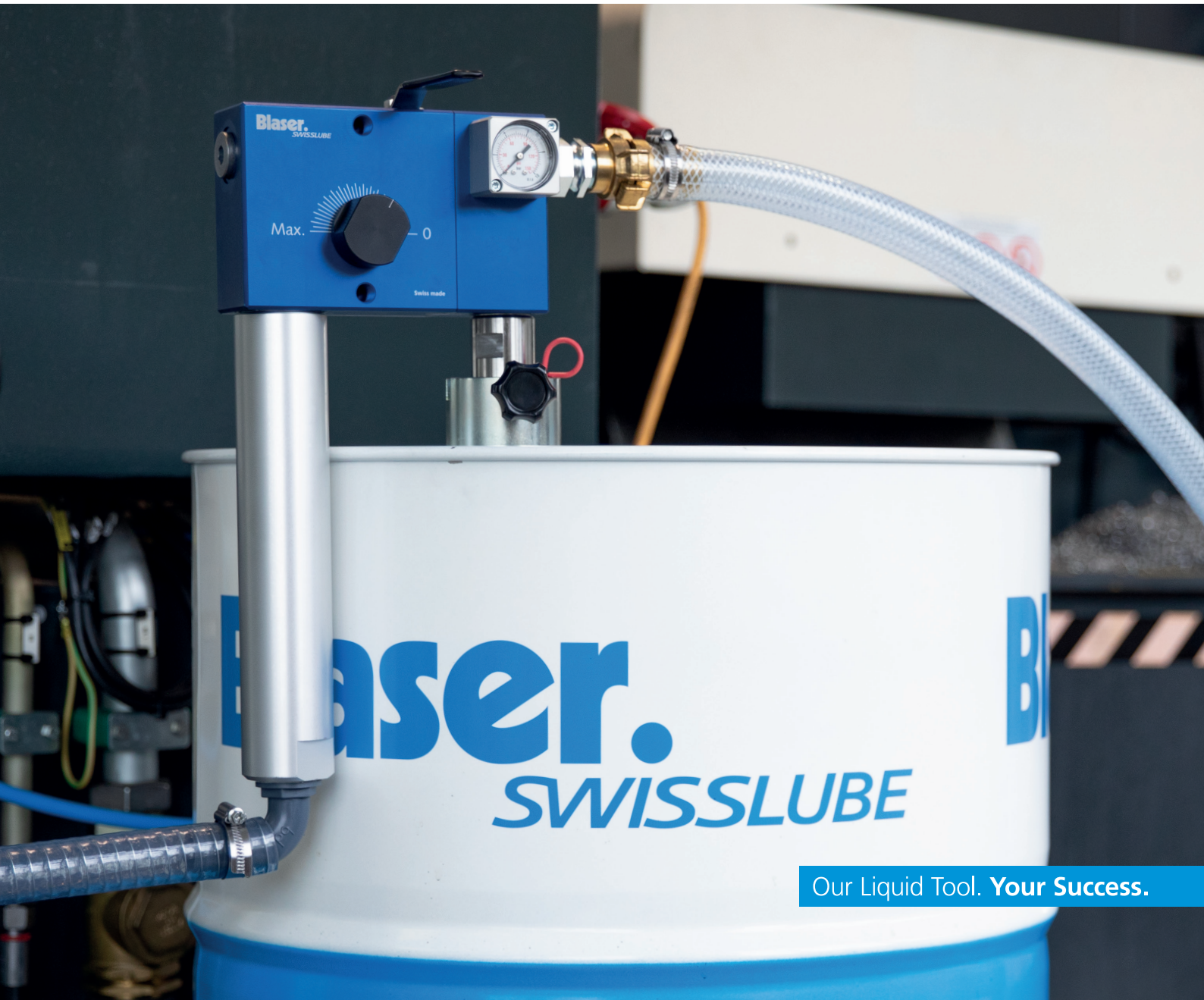

Our Liquid Tool. **Your Success.**

Validity

Validity of these operating manual

Blaser Swisslube emulsion mixing device Jetmix
Art. no. 09275-01-0000

Blaser Swisslube emulsion mixing device Jetmix US
Art. no. 09275-03-0000

Name of this document: Operating_manual_Jetmix_en
Version: 02
Date: 08.09.2026
Item no: 0017523
Language: English

(Notice: This operating manual was originally written in German. In the event of deviations and/or contradictions, the German version shall prevail.)

Confirmation

As the end customer, we hereby confirm that we have read and understood this operating manual and have instructed all employees who work with the machine described below:

Company stamp:

Place and date:

Signature:

Foreword

This operating manual is intended to make it easier to familiarize yourself with the Jetmix and its accessories and use them as intended.

The operating manual contains important information on how to operate the Jetmix safely, properly and economically. Following these instructions helps to avoid hazards, reduce repair costs and downtimes and increase the service life of the Jetmix. This operating manual is an integral part of the Jetmix and is included in the scope of delivery on resale.

The operating manual must be read and used by any person who is in charge of the Jetmix, e.g.

- Operation including set-up, troubleshooting in the work process, maintenance, disposal of operating and auxiliary materials
- Maintenance (servicing, inspection, repair) and/or
- transport and storage

In addition to the operating manual and the binding regulations for accident prevention applicable in the country of use and at the place of use, the recognized technical rules for safe and professional work must also be observed.

Copyright

The copyright to this operating manual remains with Blaser Swisslube AG. This document may only be reproduced, translated or made available to third parties with the express authorization of the publisher.

The address listed below serves as a point of contact.

Distribution
Blaser Swisslube AG
Winterseistrasse 22
3415 Hasle-Rüegsau / Switzerland

Phone +41 (0) 34 460 01 01

Email: contact@blaser.com
Web: www.blaser.com

Table of contents

Table of contents

1.	**Safety**	5
1.1	Basic safety instructions	5
1.2	Dangers when handling the device	5
1.3	Safety and protective equipment	5
1.4	Personal protective equipment and supplementary measures	6
1.5	Intended use	6
1.6	Improper use	6
1.7	Hazard, mandatory and information symbols	7
1.8	Maintenance, servicing, troubleshooting	7
1.9	Warranty and liability	7
2.	**Device description**	8
2.1	Intended use	8
2.2	Functioning of the Jetmix	8
2.3	General view / operating elements	8
2.4	Labelling	9
2.5	Scope of delivery	9
2.6	Technical data / Dimension sheet	10
3.	**Packaging, transport and storage**	11
4.	**Installation site**	11
5.	**Interface definition**	12
6.	**Initial commissioning**	13
6.1	Preparation	13
6.2	Commissioning	13
7.	**Operation**	14
8.	**Decommissioning**	15
8.1	Short-term interruption	15
8.2	Long-term interruption	15
9.	**Troubleshooting, fault correction**	16
10.	**Maintenance, servicing**	17
10.1	Maintenance schedule	17
11.	**Waste disposal**	18
12.	**Spare parts**	19/20
13.	**EC Declaration of Conformity**	21

1. Safety

1.1 Basic safety instructions

The person responsible for the safety of the device must ensure the following:

- Only qualified personnel should be authorized to work on the device.
- This personnel must always have the operating manual and the other product documentation available for all work and be obliged to observe these documents consistently.
- Unqualified personnel are prohibited from working on the device.
- The rules and regulations for accident prevention applicable to the place of use and compliance with maintenance and servicing work must be observed.

Only qualified persons may work on the device. They must have appropriate training and experience, have been instructed, be familiar with the relevant safety regulations, have been expressly authorized by the responsible person and be able to recognize and avoid potential hazards.

The responsibilities of the personnel for assembly, commissioning, operation, set-up, maintenance, storage and repair are clearly defined.

Personnel to be trained may only work on the device under the supervision of qualified personnel.

The following pages describe the safety instructions and safety requirements. These safety instructions do not claim to be exhaustive.

1.2 Dangers when handling the device

The device and assemblies are built in accordance with the state of the art and recognized safety regulations. Nevertheless, improper use or handling may result in danger to the user or third parties or damage to the device or other property. The device is only to be used as follows:

- For the intended use.
- In a safe and technically flawless condition.

Any faults that may impair safety must be rectified immediately.

1.3 Safety and protective equipment

- All safety devices must be properly fitted and functional before the Jetmix is used.
- Protective devices may only be removed after the Jetmix has been shut down and secured against switching on.
- The operating elements must be freely accessible.

1.4 Personal protective equipment and supplementary measures

- The required personal, country-specific protective equipment must be provided by the operator.
- All existing safety equipment must be checked regularly.

It is recommended that goggles and gloves are used while working on the device as it is used for metalworking fluids and in mechanical workshops.

Use eye and hand protection (in accordance with EN ISO 7010)

1.5 Intended use

The Jetmix may only be used under the intended operating conditions. The device is to be used exclusively for mixing water-miscible metalworking fluids (emulsions).
Any use other than mixing emulsion is prohibited. For more detailed information on the application, see chapter 2.1. in this operating manual.

Any other or additional use is considered improper use. The manufacturer is not liable for damage resulting from improper use. Intended use also includes the following:

- Observe and comply with all instructions and warnings in this operating manual.
- Compliance with inspection and maintenance work.

1.6 Improper use

The manufacturer is not liable for damage caused by improper use of the device.
Improper use includes, among other things:

- Use for mixing other media and from other containers.
- Connecting and operating the device with other energy sources.
- Any use of the mixing device on living creatures.

1.7 Hazard, mandatory and information symbols

All safety-relevant points in this operating manual are marked with a warning triangle, which together with the key words „WARNING“, „CAUTION“ stands for the warning of personal injury. A symbol without a warning triangle with the key word „NOTICE“ indicates a warning of possible material damage.

⚠ WARNING	Indicates a hazardous situation which, if not avoided, could result in death or serious injury.
⚠ CAUTION	Indicates a hazardous situation which, if not avoided, could result in minor or moderate injury.
NOTICE	Indicates situations that are not associated with a risk of personal injury, but which could damage the product or an object in the vicinity.

1.8 Maintenance, servicing, troubleshooting

- Prescribed adjustment and maintenance work in accordance with the maintenance schedule must be carried out on time.
- Inform operating personnel before carrying out adjustment and maintenance work.
- The water supply must be switched off and disconnected from the device.
- Protection against accidental water supply must be provided.
- Check that all screw and fitting connections are tight.

After completion of the work, all safety devices and all operating functions must be checked and documented.

1.9 Warranty and liability

Warranty and liability claims for personal injury and damage to property are excluded if they are attributable to one or more of the following causes:

- Improper use of the product.
- Work not carried out by qualified persons.
- Improper transport, storage, assembly, commissioning, operation and maintenance of the product.
- Failure to observe the instructions in the operating manual regarding safety, transport, storage, installation, operation, commissioning, maintenance and set-up of the product.
- Operating the product with defective safety devices or improperly installed or non-functional safety and protective devices.
- Structural changes to the product.
- Inadequate monitoring of machine parts that are subject to wear.
- Improperly carried out repairs and use of third-party parts.
- Catastrophes and force majeure events.

2. Device description

2.1 Intended use

The Jetmix is to be used exclusively for preparing emulsion. The Jetmix ensures the preparation of a homogeneous, finely dispersed emulsion of water and metalworking fluid concentrate. Correct preparation is a prerequisite for the stability of the emulsion to be fully effective and for economical use.

WARNING

Any other use of this device may result in personal injury and damage to property.

2.2 Functioning of the Jetmix

The Jetmix is an ideal mixing device for emulsions. The device can ensure a constant concentration of the metalworking fluid. The water flow sucks in the concentrate according to the Venturi principle and mixes it. The special design keeps the emulsion droplets small and the emulsion finely dispersed. The Jetmix comes with an emulsion mixing volume of up to 1800 l/h. The device is recommended for mixing metalworking fluids for several machines.

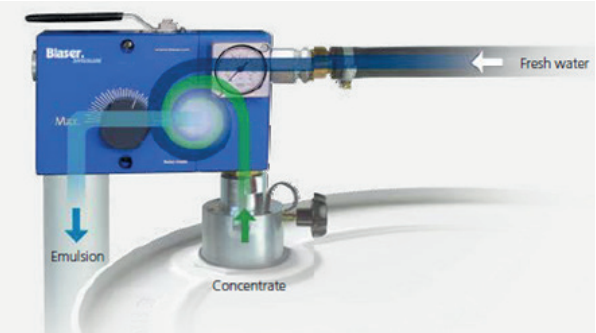

2.3 General view / operating elements

1 Combination handle water/concentrate
2 Integrated check valve
3 Manometer (water pressure)
- Combination handle closed: static pressure
- Combination handle open: dynamic pressure
4 Water connection G3/4“
5 Concentration adjustment knob
6 Spray pipe (for removal: SW46 mm)
7 Pipe bend 90°
8 Hose clamp
9 Emulsion outlet hose 3/4“
10 Hanging hook with outlet spout
11 Seal
12 Dipstick (concentrate level)
13 Clamp screw
14 Threaded flange for drum fastening
15 Intake pipe with check valve
16 Optional system separator type BA according to EN 1717
17 Marking stickers

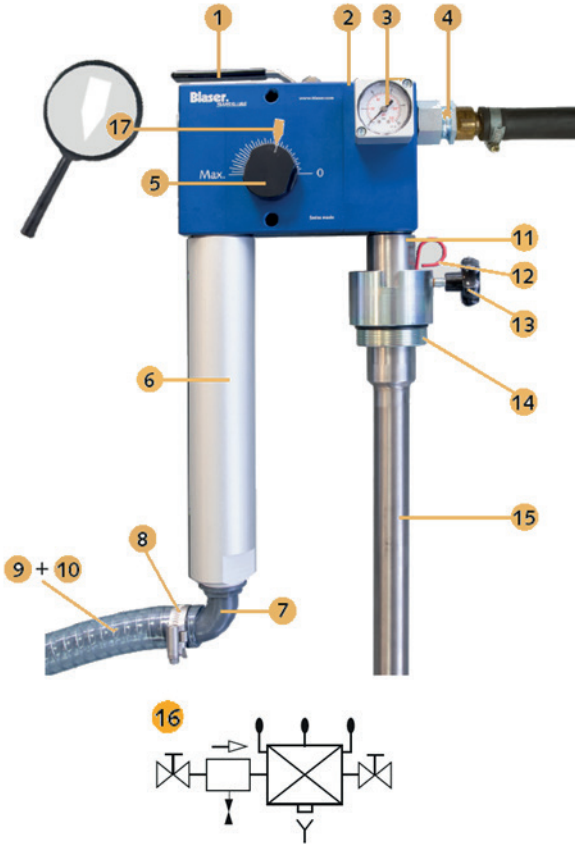

2.4 Labelling

The following markings are affixed to the Jetmix. These contain important information for the exact identification of the device.

Labelling:

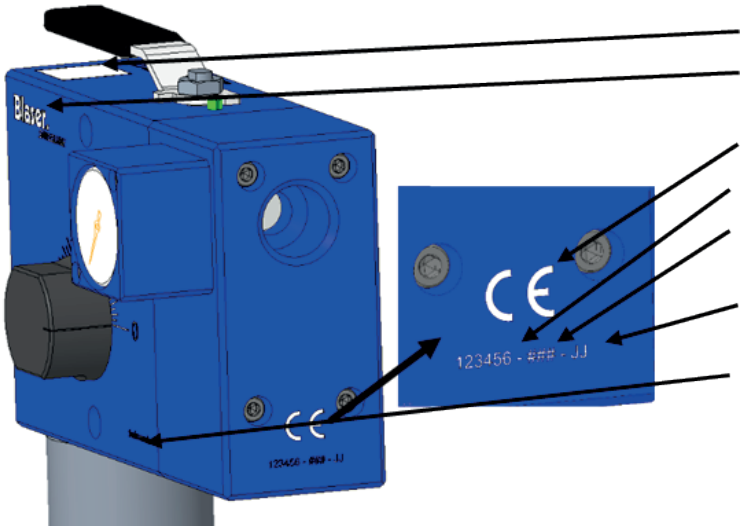

1 QR code for online documentation
2 Company name
3 CE marking
4 PA number
5 Serial number
6 Year of production
7 Swiss made

NOTICE

To order spare parts and for technical support, please provide the information entered on the device.

2.5 Scope of delivery

- 1 pc. Mixing device Jetmix
- 1 pc. Drum flange
- 1 pc. Hose with hose holder and clamp
- 1 pc. Dipstick with MEGU ring and dipstick
- 1 Operating manual
- 1 sheet of 10 adhesive labels arrow
- 1 Packaging

2.6 Technical data / Dimension sheet

Jetmix EU

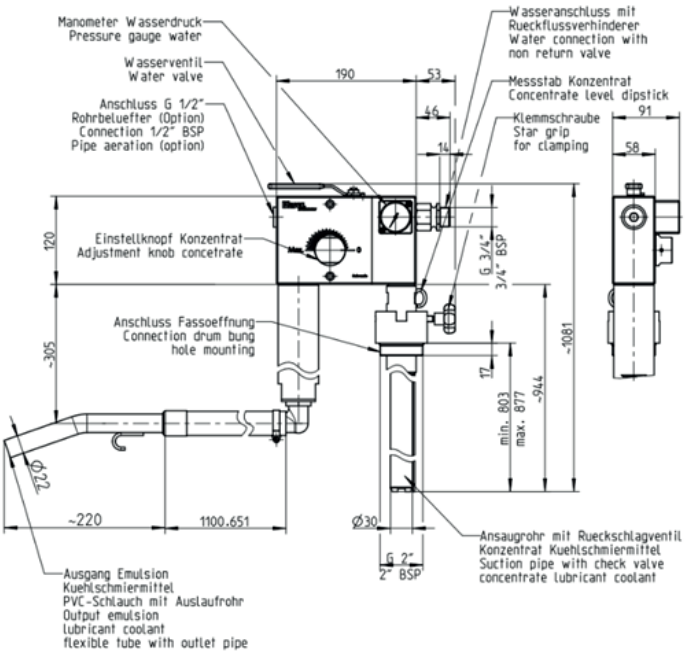

Jetmix US

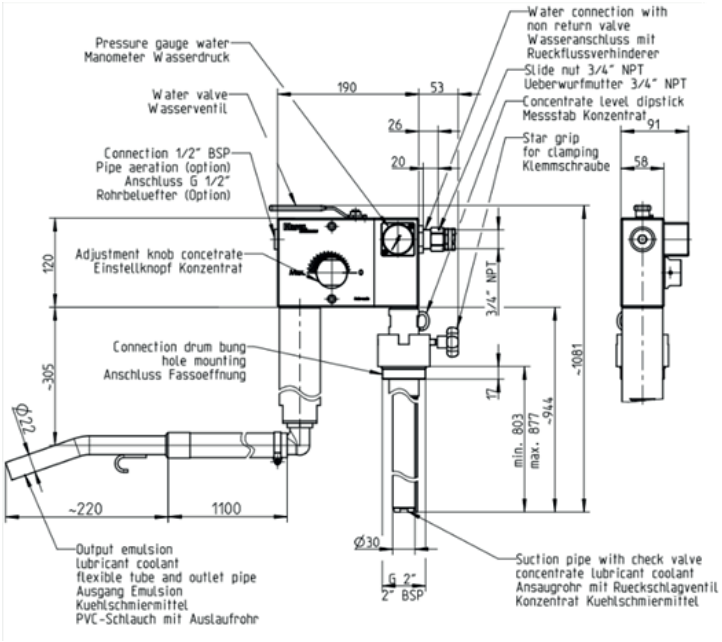

Designation	Mixing device Jetmix	Unit
Design	EU / US	-
Model	Drum assembly	-
Emulsion concentration range	ca. 0.5 - 25	%
Required water pressure	2 - 6	bar (dynamic)
Performance at 3 bar water pressure	1800	l/h
Water connection	AG G 3/4" / IG 3/4" NPT	-
Housing material	Aluminum	-
Drum size	208 (optional 1000 lt IBC container)	lt
Weight	8.4	kg
Application medium	water-miscible cutting fluids	-
Emission level L_{pa}	< 70	dB (A)

3. Packaging, transport and storage

The product is prepared by Blaser for transport to its first destination. The packaging unit must not be exposed to overloading. The packaging and its contents must be protected from the effects of moisture. The transport temperature between +5°C and +40°C must be maintained.

If transport damage is discovered during the incoming goods inspection, proceed as follows:

- Notify the deliverer (carrier, etc.)
- Record damage report
- Inform supplier

Storage and temporary storage in an aggressive, damp environment or outdoors can lead to corrosion and other damage.

4. Installation site

All legal requirements must be clarified on site and compliance with them ensured. The floor and space conditions must be clarified before setting up the device in order to ensure safe operation for personnel and device in the long term. The Jetmix must be installed in such a way that safe and continuous operation is guaranteed.

The connection to the water pipe and the location of the device should be chosen so that there is no contact with live devices or connections.

Metalworking fluid or concentrate may leak during assembly, operation and maintenance. Any spilled medium must be cleaned immediately due to the risk of slipping.

The Jetmix has been built for operation in rooms that are weather-proofed.
Operation and storage in an aggressive, excessively humid environment or outdoors can lead to damage for which the manufacturer assumes no liability.
Connection specifications and commissioning are described in the following chapters.

5. Interface definition

1 Water connection

Use a high-pressure hose with a rotating screw coupling, type EU external thread G 3/4" or type US internal thread 3/4" NPT.
The water connection must not drip. The water connection must be protected in accordance with regional regulations to prevent any emulsion backflow into the water network. In Europe, the water connection must be protected by a system separator type BA according to EN 1717.

2 Dip tubes with drum adapter

The Jetmix is shipped with a stainless steel dip tube and a drum adapter.
The drum adapter is screwed into the opening of the container. The dip tube can be inserted.

3 Output

The flexible hose is attached to the pipe bend using the hose clamp. The 90° pipe bend must not be removed.
The hose must not be tapered or bent.

6. Initial commissioning

The water supply line (high-pressure hose with rotating screw coupling G 3/4") requires a continuous cross-section of 3/4" and a dynamic water pressure of at least 2 bar. The water connection must be protected in accordance with regional regulations to prevent any back flow of emulsion into the water network.
In Europe, the water connection must be protected by a system separator type BA according to EN 1717.

6.1 Preparation

- Screw the intake pipe (15 / page 8) with seal (11 / page 8) firmly onto the Jetmix.
- Attach the emulsion outlet hose (9 / page 8) to the plastic bracket (7 / page 8) using the hose clamp (8 / page 8).

6.2 Commissioning

- Screw the threaded flange (14 / page 8) into the bunghole of the drum.
- Insert the dipstick (12 / page 8) into the hole provided in the flange.
- Check the ball in the check valve at the bottom of the intake pipe (15 / page 8) for mobility.
- Insert the intake pipe (with Jetmix mounted) into the threaded flange on the concentrate tank and clamp it using the clamping screw (13 / page 8).
- Place the emulsion outlet hose over the machine's coolant tank. The hose must not exceed a maximum length of 10 m and the height difference of 2 m above and below (measured from the drum lid) must not be exceeded. Narrowing or kinking of the hose must be avoided.
- The concentration must be adjusted using a refractometer. The respective concentration depends on the viscosity of the coolant concentrate and the water pressure.
- Set the desired concentration using the adjustment knob (5 / page 8).
- The position of the adjustment head can be marked with the marking sticker (17 / page 8).
- After presetting the concentration, first open the main water tap and then the combination handle (1 / page 8) to fill.
- To switch off: First close the combination handle, then the main water tap. Then briefly open the combination handle to relieve pressure.

CAUTION

In Europe, the water connection must be protected by a system separator type BA according to EN 1717.

NOTICE

When working with concentrate and emulsion, the instructions and safety regulations provided by the manufacturers must be observed. Use personal protective equipment according to the manufacturer's instructions.

Use eye and hand protection (in accordance with EN ISO 7010)

7. Operation

- After connecting the water pipe and immersing the dip tube into the container with concentrate, the tap can be opened. Emulsion flows out of the flexible hose.

When opening and closing the faucet, make sure that your hand does not get caught between the body and the lever.

- The desired concentration can be adjusted between approximately 0.5 and 25% using the regulating valve. The respective concentration depends on the viscosity of the coolant concentrate, the water pressure and the water temperature. The concentration must be adjusted using a calibrated refractometer.
- After the desired amount of emulsion has been prepared, close the tap.

To avoid pressure surges on the water supply network, the tap must always be closed slowly.

- Then do not leave the water hose under pressure and disconnect the device from the main water line.

Use eye and hand protection (in accordance with EN ISO 7010)

8. Decommissioning

8.1 Short-term interruption

When not using the Jetmix, the following points should be observed:

- Close the tap and disconnect the device from the main water line.
- Release any residual pressure in the system by opening and closing the tap.

8.2 Long-term interruption

If the Jetmix is not used for a long period of time or is being serviced, the following points should be observed:

- Close the tap and disconnect the device from the main water line.
- Release any residual pressure in the system by opening and closing the tap.

NOTICE

Make sure that no water gets into the container containing the concentrate. Water in the concentrate leads to inverse emulsion and makes the concentrate unusable.

- Remove the device with the dip tube from the container and clean it with a cloth. When removing the dip tube from the container, there is concentrate in the tube. The check valve prevents the concentrate from leaking out directly. To prevent the concentrate from leaking out uncontrollably, the concen trate should be drained in a controlled manner by pushing back the ball in the check valve.

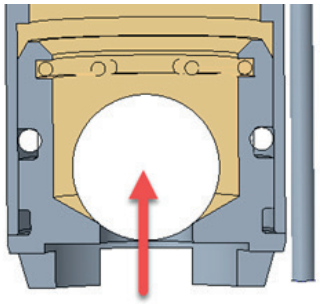

CAUTION

Risk of accidents and environmental hazards: No concentrate or emulsion should be spilled. The concentrate and emulsion must be disposed of properly (hazardous waste).

9. Troubleshooting, fault rectification

CAUTION

All work on the machine must only be carried out when it is at a standstill. The water supply must be turned off and the appliance must be disconnected from the power supply.

Error	Possible cause / remedy
Insufficient dynamic water pressure (<2 bar)	Eliminate constrictions in the supply line. Open the tap completely. Check pressure conditions at the water connection.
Concentration control valve set to 0	Open concentration control valve.
Dirty mixing nozzle in the device	Cleaning the mixing nozzle when the concentration drops or the emulsion is heterogeneous.
Container with concentrate empty	Change of container.
Dip tube clogged	Clean the pipe so that the suction can be corrected again and the drop in concentration is eliminated.
Suction of air in the suction area of the concentrate	Check seals and replace if necessary.
Unauthorized modification of the device (dismantling, installation of third-party accessories, modifications, etc.)	Revert modifications.

Use eye and hand protection (in accordance with EN ISO 7010)

10. Maintenance, servicing

This chapter tells you how to maintain the Jetmix. The overview shows you what needs to be serviced or checked and when.

NOTICE

This chapter does not describe how to repair the device after damage. This work should only be carried out by a trained specialist or by the manufacturer's customer service.

10.1 Maintenance schedule

The specified maintenance intervals refer to single-shift operation. Maintenance may need to be carried out more frequently depending on the area of application or in the case of multi-shift operation. Additional influences such as the cleanliness of the working environment must also be taken into account.

WHEN	WHAT	HOW	WHO
Weekly	Cleaning the device	With a soft cloth and all-purpose cleaner	Specialists of the operator
Monthly	Check the condition of the hoses and seals	Visual inspection for leaks	Specialists of the operator

CAUTION

All work on the device must only be carried out when it is at a standstill. The water supply must be turned off and the device must be disconnected from the power supply.

CAUTION

Risk of accidents and environmental hazards: No concentrate or emulsion should be spilled. The concentrate and emulsion must be disposed of properly (hazardous waste).

11. Waste disposal

CAUTION

All work on the device must only be carried out when it is at a standstill. The water supply must be turned off and the device must be disconnected from the power supply.

The various materials/liquids must be handled professionally and separately in accordance with the relevant national regulations and disposed of.

Product	Material	Waste disposal
Housing, rods, tubes, dip tube	Steel and aluminum	Separation of metals, feeding for recycling
Hoses, seals, etc.	Rubber, plastics	Separation of materials, feeding for recycling
Concentrate, emulsion	According to the manufacturer's safety data sheet	Disposal instructions of the metalworking fluid manufacturer must be followed.

CAUTION

Be careful not to spill any concentrate or emulsion. Take appropriate precautions in advance to collect any spilled concentrate or emulsion.

12. Spare parts

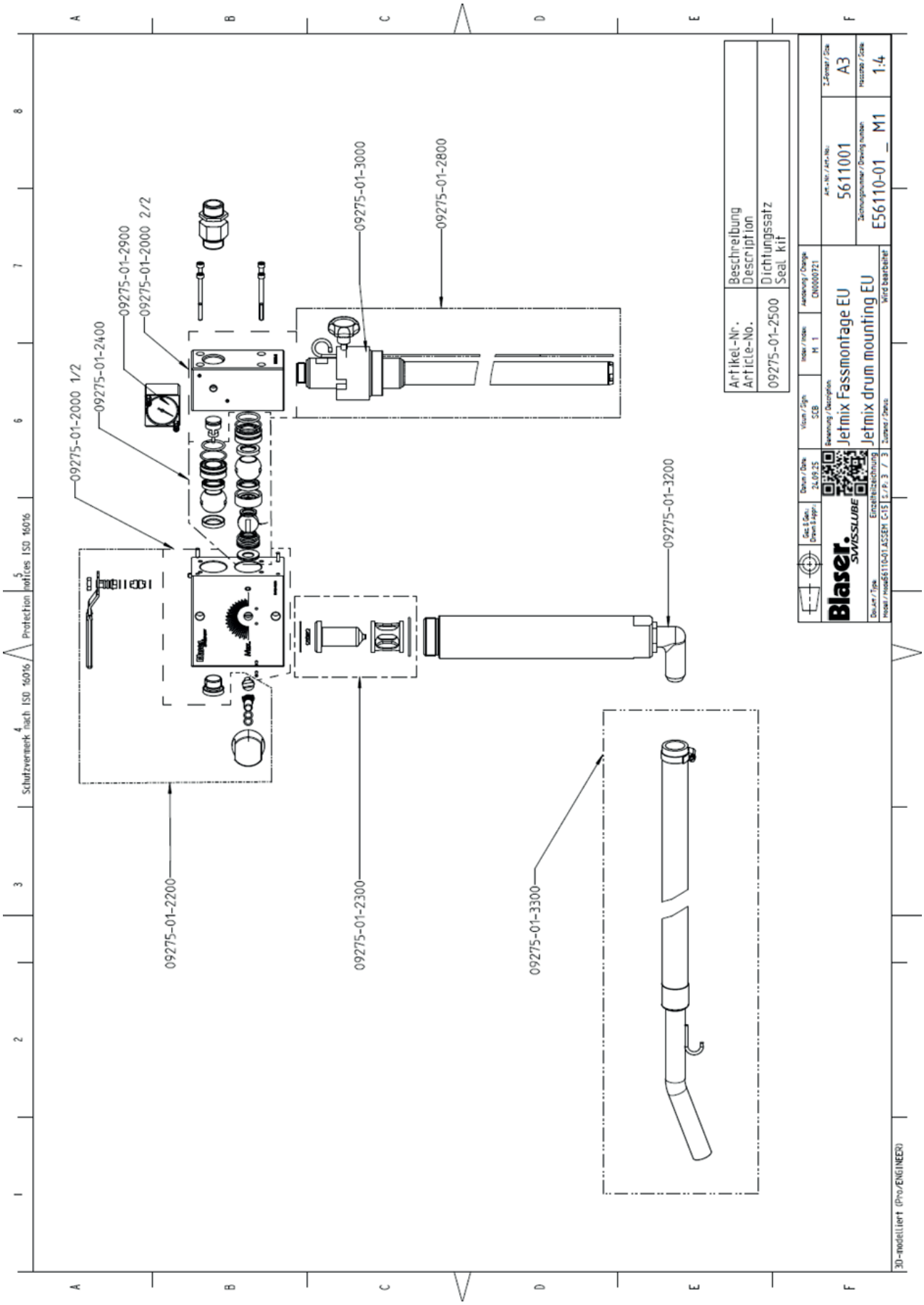

Item	Designation
09275-01-2000	Spare parts kit housing
09275-01-2200	Spare parts kit adjustment set
09275-01-2300	Spare parts kit nozzle set
09275-01-2400	Spare parts kit ball set
09275-01-2500	Spare parts kit seal set
09275-01-2800	Dip tube
09275-01-2900	Pressure gauge
09275-01-3000	Drum flange cpl.
09275-01-3100	Backflow preventers
09275-01-3200	Plastic bracket
09275-01-3300	Hose set with outlet pipe and clamp
OPTIONS	
Item	**Designation**
09275-01-2600	Water meter with screw connection
09275-01-2700	Hose connection set
09279-01-0000	Check valve with screw connection
09282-02-0000	Attachment kit for Jetmix mixing device to IBC container
09294-01-0000	Conversion kit Jetmix drum to wall mounting
09277-01-0000	Lockable hood
09280-01-0000	Exhaust valve

13. EC Declaration of Conformity

EG-Konformitätserklärung

im Sinne der Maschinenrichtlinie 2006/42/EG, Anh. II 1. A

Original

ABNOX®
Lubrication & Metering Solutions

Die alleinige Verantwortung für die Ausstellung dieser Konformitätserklärung trägt der Hersteller

Blaser Swisslube AG

Winterseistrasse 22

SN - 3415 Hasle-Rüegsau

In der Gemeinschaft ansässige Person, die bevollmächtigt ist, die relevanten technischen Unterlagen zusammenzustellen

Blaser Swisslube AG

Winterseistrasse 22

CH - 3415 Hasle-Rüegsau

Beschreibung und Identifizierung der Maschine

Produkt	Mischgerät Jetmix
Typ	EU / US
Seriennummer	Produktionsauftragsnummer - fortlaufende Nummerierung (neu startend bei jedem PA) - zweistellige Jahreszahl
Maschinennummer	-
Projektnummer	Projekt O-020
Handelsbezeichnung	Emulsionsmischgerät
Auftrag	-
Modell	Jetmix
Zusatzangaben	-
Chargennummer	-
Funktion	Emulsionsmischgerät. Das Gerät wird an das Wasserleitungsnetz angeschlossen. Im Betrieb wird durch den Wasserstrom ein Unterdruck erzeugt und Kühlschmierstoff angesaugt. Über ein Dosierkugel kann die Konzentration / das Mischverhältnis von 0 - ca.25% eingestellt werden. Vor dem Austritt aus dem Gerät wird im Strahlrohr der Kühlschmierstoff und das Wasser gemischt.

Hasle-Rüegsau, 25.07.2024

Ort, Datum	Unterschrift Rolf Schneider Head of Services Blaser AG	Unterschrift Benjamin Iseli Product Manager ABNOX AG

Seite 1/1

0017523 Operating_manual_Jetmix_en (Version 02) © Blaser Swisslube AG, Switzerland

Test us. It's worth it.

blaser.com

Our Liquid Tool. **Your Success.**